HYUNDAI

HX220PRO/HX225LPRO

Equipment for Improving Performance and Efficiency

Rated Power 135kW/2,100rpm **Engine** CUMMINS B7

SPECIFICATIONS

ENGINE

Model	CUMMINS B7
No. of Cylinders	6 Cylinders
Rated Power	135kW/2,100rpm
Max. torque	746NM/1,300rpm
Bore x stroke	107mm×124mm
Piston Displacement	6.7L

HYDRAULIC SYSTEM

MAIN PUMP	
Model	Variable Displacement Piston Pump
Max. Flow	2×234L/min
SAFETY VALVE SETTING VALUE	
Hydraulic Circuit of Working Device	350kg/cm²(380kg/cm²)
Traveling Hydraulic Circuit	350kg/cm²
Swing Hydraulic Circuit	300kg/cm²
SWING SYSTEM	
Swing Speed	10.6rpm
TRAVELING SECTION	
Travel Speed (High/Low)	5.8/3.5km/hr
CYLINDER	
Boom Cylinder	120×85×1,290mm
Arm Cylinder	140×100×1,433mm
Bucket Cylinder	120×80×1,060mm

FUEL TANK CAPACITY

Fuel Tank	395L
Hydraulic Tank(system)	160L(225L)

MODEL CONFIGURATION

Model	HX220PRO	HX225LPRO	HX225LPRO
Bucket Capacity	0.92m³	1.05m³	1.2m³

UNDERCARRIAGE

Carrier Rollers	2 EA(Each Side)	2 EA(Each Side)	2 EA(Each Side)
Track Rollers	7 EA(Each Side)	8 EA(Each Side)	8 EA(Each Side)
No. of Track Shoes	45 EA(Each Side)	49 EA(Each Side)	49 EA(Each Side)

OPERATING WEIGHT

Track Width	600mm	600/800mm	600mm
Operating Weight	21,740kg	22,850/23,450kg	23,500kg
Ground Pressure	0.51kgf/cm²	0.49/0.37kgf/cm²	0.5kgf/cm²
Counterweight	3,800kg	3,800kg	4,500kg

MAX. DIGGING FORCE(ISO)

Bucket Digging Force	154.0(167.2)kN	154.0(167.2)kN	146.6(159.2)kN
Arm Digging Force	106.5(115.6)kN	106.5(115.6)kN	105.8(114.9)kN

() refers to increasing power

DIMENSIONS & WORKING RANGE

	WORKING RANGE			
	Boom: 5700mm / Arm: 2900mm			
	Model	HX220PRO	HX225LPRO	HX225LPRO
	Bucket Capacity	0.92m³	1.05m³	1.20m³
a	Max. Digging Reach	9,910mm	9,936mm	9,974mm
a'	Max. Digging Reach on Ground	9,742mm	9,768mm	9,807mm
b	Max. Digging Depth	6,447mm	6,472mm	6,509mm
b'	Max. Digging Depth on Ground (8 feet horizontal)	6,270mm	6,296mm	6,336mm
c	Max. Vertical Digging Depth	5,738mm	5,713mm	4,640mm
d	Max. Digging Height	9,814mm	9,830mm	9,734mm
e	Max. Unloading Height	7,031mm	7,007mm	6,969mm
f	Min. Swing Radius	3,423mm	3,423mm	3,423mm
	DIMENSIONS			
A	Track Grounding Length	3,270mm	3,650mm	3,650mm
B	Track Length	4,065mm	4,445mm	4,445mm
C	Ground Clearance of Counterweight	1,080mm	1,080mm	1,080mm
D	Tail End Length	2,770mm	2,770mm	2,770mm
D'	Tail Swing Radius	2,877mm	2,877mm	2,877mm
E	Upper Body Width	2,740mm	2,740mm	2,740mm
F	The Height of the Cab Roof above the Ground	3,029mm	3,029mm	3,029mm
G	Min.Ground Clearance	475mm	475mm	475mm
H	Wheel Track	2,390mm	2,390mm	2,390mm
I	Overall Length	9,545mm	9,545mm	9,545mm
J	Overall Height	2,936mm	2,910mm	2,910mm
K	Track Width	600mm	600/800mm	600mm
L	Overall Width	2,990mm	2990/3190mm	2,990mm

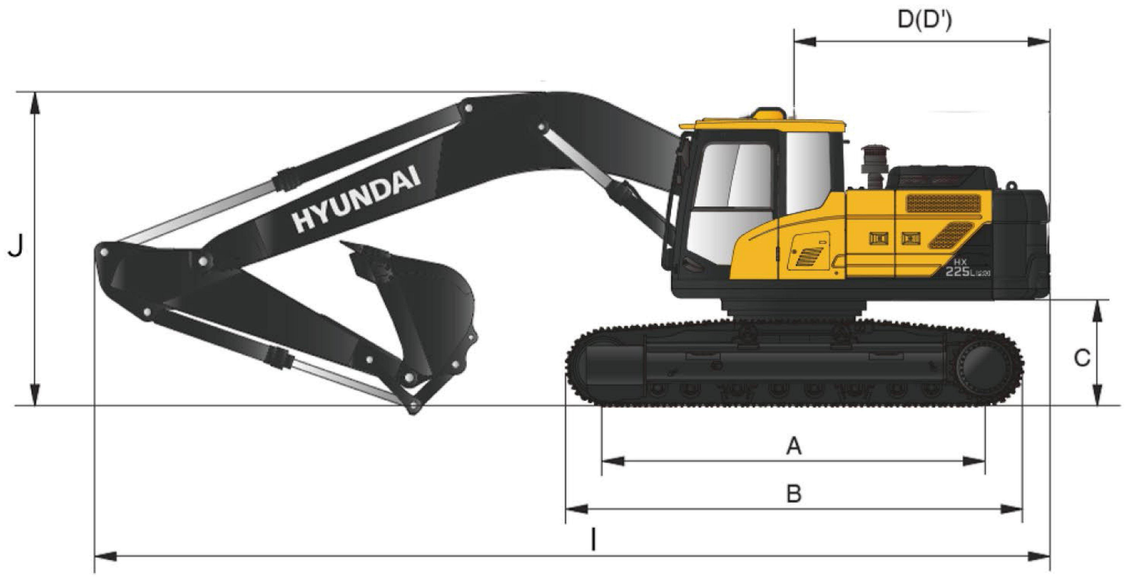

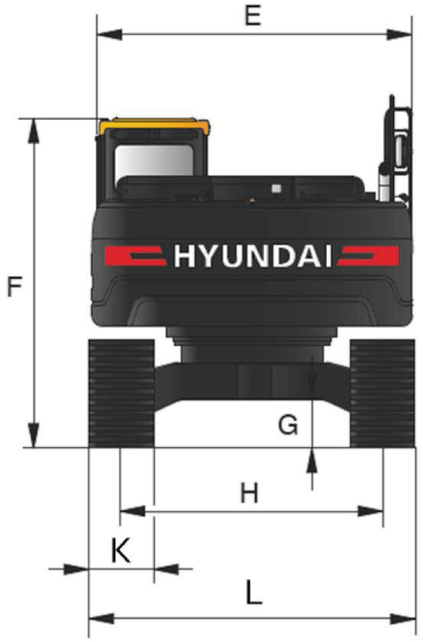

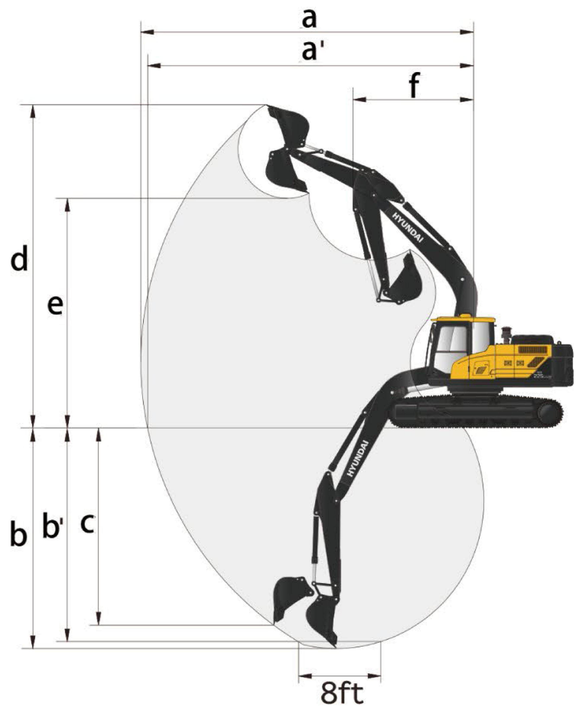

HYUNDAI

WeChat official account