HYUNDAI

HX380VL

Large Earthwork Loading Equipment

Rated Power 214kW/1,800rpm **Operating Weight** 36,400kg **Bucket Capacity** 1.95m^3

SPECIFICATIONS

ENGINE

Model	Scania DC09
No. of Cylinders	5 Cylinders
Rated Power	214kW/1,800rpm
Max. torque	135kg.m/900rpm
Bore x stroke	130mm×140mm
Piston Displacement	9.3L

HYDRAULIC SYSTEM

HYDRAULIC SYSTEM	
Model	FEH Fully Electric Control
Max. Flow	2×350L/min
SWING SYSTEM	
Swing Speed	9.2rpm
Max. Swing Torque	13,600kg.m
TRAVELING SECTION	
Travel Speed (High/Low)	5.4/3.3km/hr
HYDRAULIC CYLINDER	
Boom Cylinder	2-150×100×1,450mm
Arm Cylinder	1-170×120×1,805mm
Bucket Cylinder	1-145×95×1,300mm
MAX. DIGGING FORCE(ISO)	
Bucket Digging Force	24.4ton(240KN)
Arm Digging Force	20.5ton(201KN)

FUEL TANK CAPACITY

Fuel Tank	581L
Hydraulic Tank	385L

CAPACITY OF COOLANT AND LUBRICATING OIL (REPLACEMENT)

Radiator	50L
Engine	38L
Walking Deceleration Gear Oil	2×7L
Swing Reducer	8L

UNDERCARRIAGE

Central Framework	X-shaped
Carrier Rollers	2 EA(Each Side)
Track Rollers	9 EA(Each Side)
No. of Track Shoes	48 EA(Each Side)
Track shoe Width	600mm

OPERATING WEIGHT

Operating Weight	36,400kg
Ground Pressure	0.7kgf/cm^2

DIMENSIONS & WORKING RANGE

WORKING RANGE		
Boom: 6500mm/Arm: 2900mm/Bucket: 1.95m³		
A	Max. Digging Reach	11,035mm
B	Max. Digging Reach on Ground	10,836mm
C	Max. Digging Depth	7,292mm
D	Max. Unloading Height	7,431mm
E	Min. Unloading Height	3,082mm
F	Max. Digging Height	10,396mm
G	Max. Bucket Pin Height	9,191mm
H	Max. Vertical Digging Depth	3,744mm
I	Max. Vertical Digging Reach	9,337mm
J	Max. Digging Depth of 8 feet	7,101mm
K	Min. Digging Reach of 8 feet	3,450mm
L	Min. Digging Reach	1,774mm
M	Min. Swing Radius	4,373mm
d	Bucket Swing Angle	173°
DIMENSIONS		
N	Tail Swing Radius	3,530mm
O	Transport Height (boom)	3,490mm
P	Transport Height (hose)	3,560mm
Q	Transport Length	11,296mm
Z	Transport Width (lower body width)	3,280mm
S	Ground Clearance of Counterweight	1,180mm
T	Overall Height of Cab	3,100mm
U	Upper Body Width	3,155mm
V	Cabin Height (above turntable)	853mm
W	Cabin Width	1,010mm
X	Center Distance Between Guide Wheel and Drive Wheel	4,040mm
Y	Track Length	4,940mm
a	Track Width	600mm
b	Track Height	970mm
c	Min.Ground Clearance	475mm

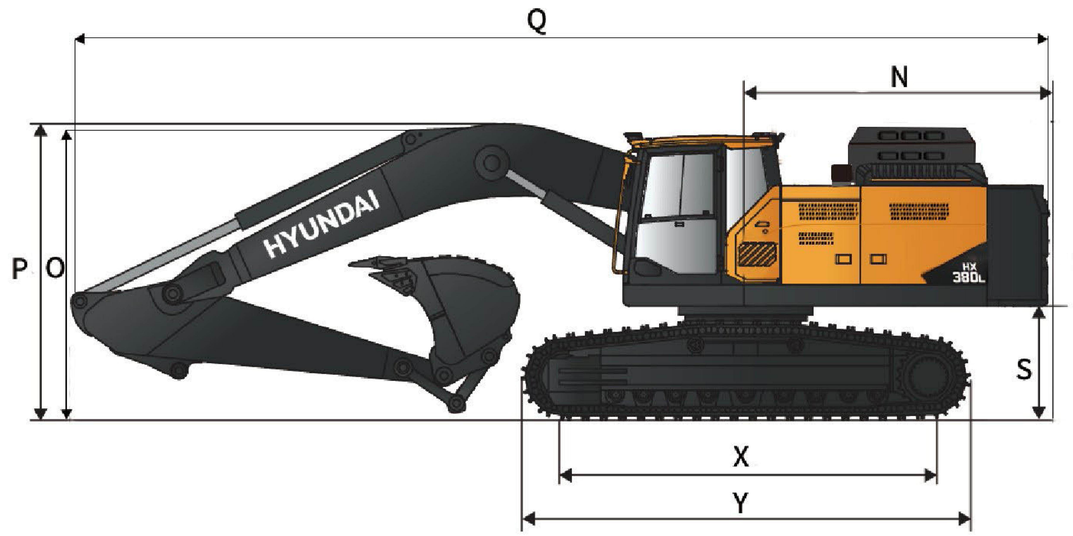

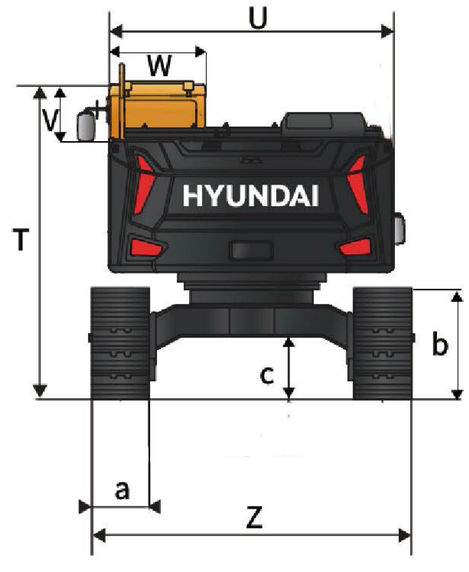

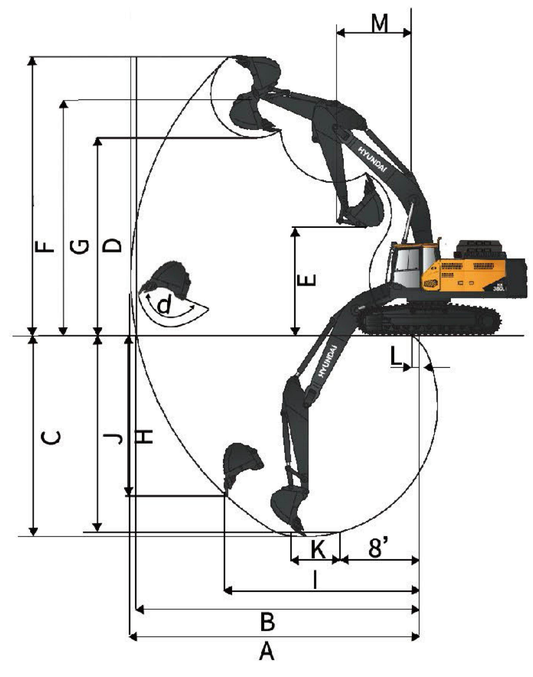

现代工程机械
HYUNDAI
咨询热线: 400 [illegible]900

微信公[illegible] 斗音账号
WeChat official account