HYUNDAI

HX505VL/HX560VL

Large Scale Mining Loading and Breaking Equipment

Rated Power 294kW/1,800rpm **Engine** SCANIA DC13

SPECIFICATIONS

ENGINE

Model	Scania DC13
No. of Cylinders	6 Cylinders
Rated Power	294kW/1,800rpm
Max. torque	189.8kg.m/1,500rpm
Bore x stroke	130mm×160mm
Piston Displacement	12.7L

HYDRAULIC SYSTEM

HYDRAULIC SYSTEM	
Model	FEH Fully Electric Control
Max. Flow	2×390L/min
SAFETY VALVE SETTING VALUE	
Hydraulic Circuit of Working Device	330kg/cm²(32.3Mpa)
Traveling Hydraulic Circuit	330kg/cm²(32.3Mpa)
Swing Hydraulic Circuit	300kg/cm²(29.4Mpa)
Boosting Hydraulic Circuit	350kg/cm²(34.3Mpa)
SWING SYSTEM	
Swing Speed	9.2rpm
Max. Swing Torque	20,130kg.m
TRAVELING SECTION	
Travel Speed (High/Low)	5.3/3.1km/hr
MAX. DIGGING FORCE(ISO)	
Bucket Digging Force	25.7/24.4ton(252/239kN)
Arm Digging Force	23.5/24.9ton(230/244kN)
HYDRAULIC CYLINDER	
Boom Cylinder	2-170×115×1,650mm
Arm Cylinder	1-190×130×1,980mm
Bucket Cylinder	1-170×115×1,341mm

FUEL TANK CAPACITY

Fuel Tank	626L
Hydraulic Tank	390L

CAPACITY OF COOLANT AND LUBRICATING OIL (REPLACEMENT)

Radiator	52.8L
Engine	45L
Walking Deceleration Gear Oil	2×9L
Swing Reducer	2×5L

UNDERCARRIAGE

Central Framework	X-shaped
Carrier Rollers	3 EA(Each Side)
Track Rollers	9 EA(Each Side)
No. of Track Shoes	53 EA(Each Side)
Track shoe Width	600mm

OPERATING WEIGHT

Model	HX505VL	HX560VL
Operating Weight	50,500kg	53,200kg
Ground Pressure	0.88kg/cm²	0.92kg/cm²
Bucket	3.2m³	3.6m³
Counterweight	9.2ton	11.1ton

DIMENSIONS & WORKING RANGE

WORKING RANGE		
Boom: 6300mm/Arm: 2900mm/Bucket: HX505VL 3.2m³ / HX560VL 3.6m³		
A	Max. Digging Reach	11,069mm
B	Max. Digging Reach on Ground	10,782mm
C	Max. Digging Depth	6,991mm
D	Max. Unloading Height	6,532mm
E	Min. Unloading Height	2,695mm
F	Max. Digging Height	9,926mm
G	Max. Bucket Pin Height	8,620mm
H	Max. Vertical Digging Depth	5,082mm
I	Max. Vertical Digging Reach	8,005mm
J	Max. Digging Depth of 8 feet	6,910mm
K	Min. Digging Reach of 8 feet	3,550mm
L	Min. Digging Reach	110mm
M	Min. Swing Radius	4,715mm
d	Bucket Swing Angle	186.2°
DIMENSIONS		
N	Tail Swing Radius	3,800mm
O	Transport Height (boom)	4,140mm
P	Transport Height (hose)	4,180mm
Q	Transport Length	11,530mm
Z	Transport Width (lower body width)	3,690mm
S	Ground Clearance of Counterweight	1,425mm
T	Overall Height of Cab	3,370mm
U	Upper Body Width	2,990mm
U'	Upper Body Width(CAT WALK)	3,295mm
V	Cabin Height (above turntable)	850mm
W	Cabin Width	1,010mm
X	Center Distance Between Guide Wheel and Drive Wheel	4,475mm
Y	Track Length	5,505mm
Z	Overall Width (track expansion/contraction)	3,490/2,990mm
a	Track Width	600mm
b	Track Height	1,190mm
c	Min.Ground Clearance	725mm

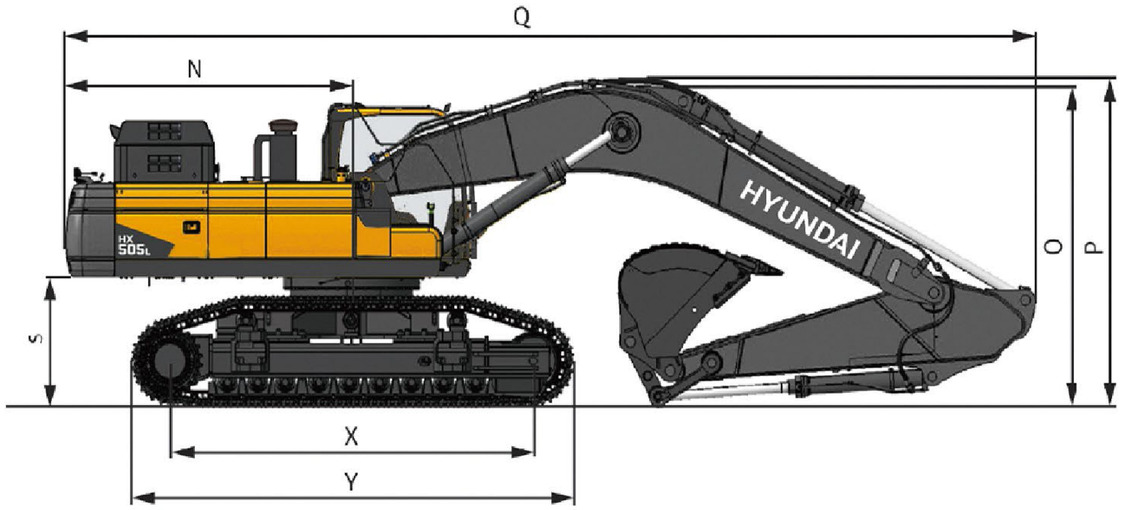

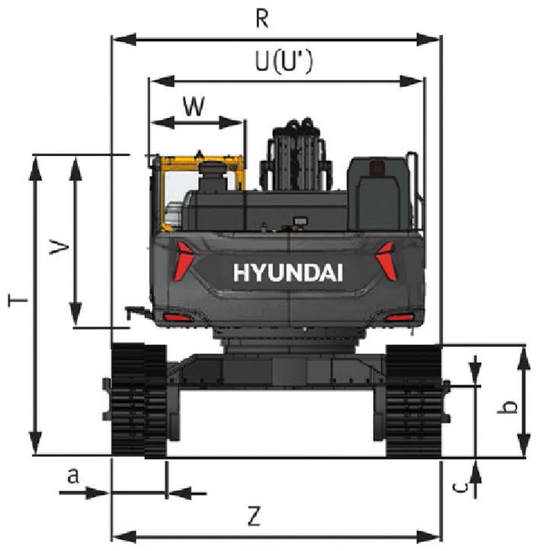

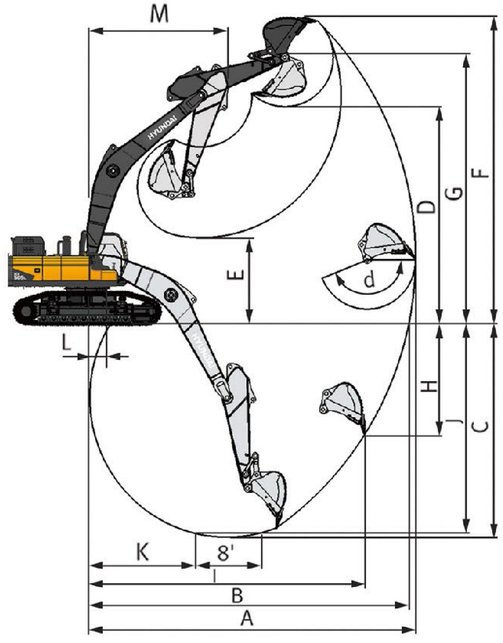

HYUNDAI

WeChat official account